3 PM2 unit (UD-S*7900002)

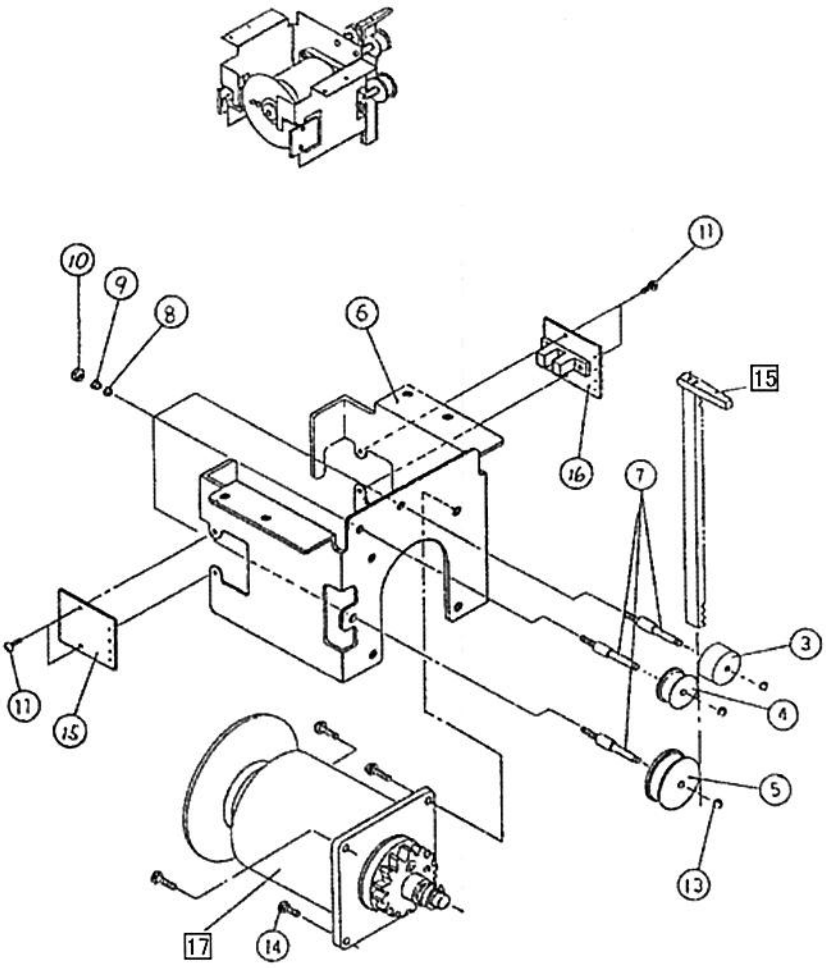

3 PM2 unit (UD-S*7900002)

Order min.Q'ty 1

Ckt.No.	Order No.	Parts No	Part Name	Q'ty/Unit	order min.Q'ty
1					
2					–
3	UD-S*7900014	710A0083	Push-up Rod guide kit	1	See P.41
4		710A0084		1	
5		710A0082		1	
6	–	710A0071-3	Bracket	1	–
7	–	MSD03	Roller shaft	3	–
8	–	XWE3FJ	Washer	3	See P.38/39
9	–	XWA3BFJ	Spring washer	3	See P.38/39
10	–	XNG3FJ	Nut	3	See P.38/39
11	–	XYN3+C8FJ	Screw-pan	4	See P.38/39
12	–	XYN2+C6FJ	Screw-pan	3	See P.38/39
13	–	XUC3VW	E-ring	3	See P.38/39
14	–	XYN4+C12FJ	Screw-pan	4	See P.38/39
15	UD-S*7900001	501-UD710A020J2	Sensor PCB kit 1	1	See P.40
16		501-UD710A020J1		1	
15	UD-S*7900013	–	Push-up Rod unit	1	2
17	–	700-710AU08	Badge Driving Motor unit	1	–