8 Power Supply Panel unit (UD-S*7900033)

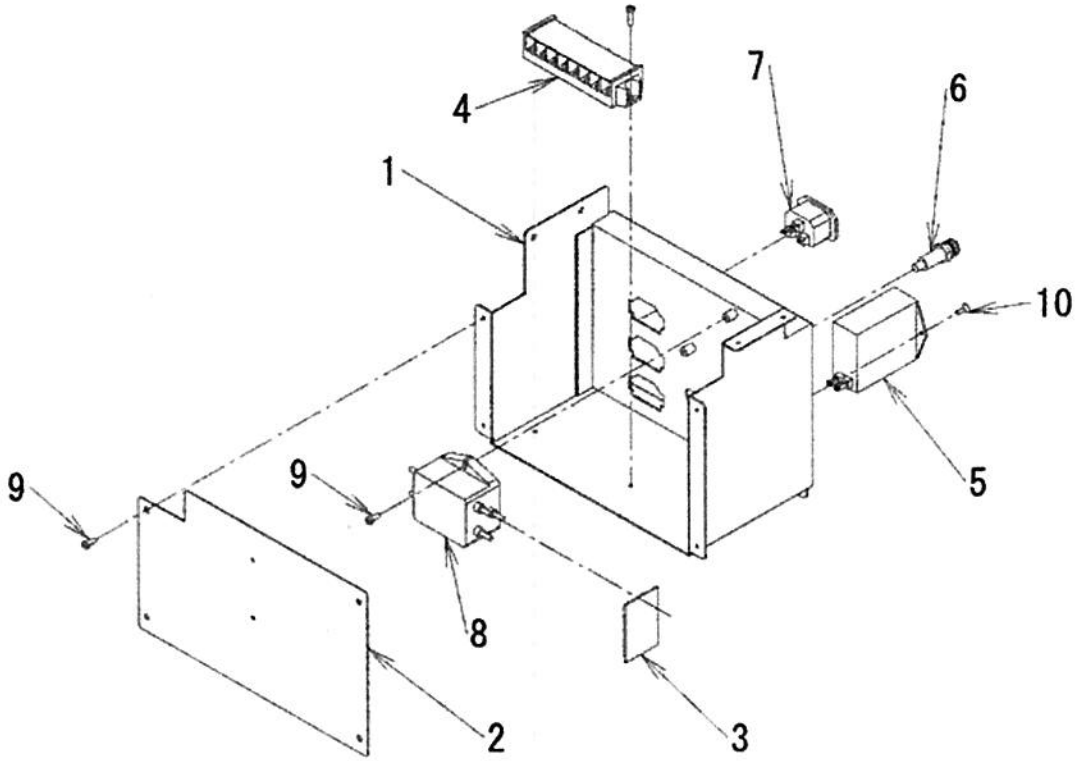

8 Power Supply Panel unit (UD-S*7900033)

Order min.Q'ty 1

Ckt.No.	Order No.	Parts No	Part Name	Q'ty/Unit	order min.Q'ty
1	–	UDM7900043-3	Power box	1	–
2	–	UDM7900050	Power box cover	1	–
3	–	UDP794X04A	ZNR PCB	1	–
4	–	JTP30-8U-ULCSA	Terminal block	1	–
5	–	FN1393100511	AC-inlet	1	–
6	–	K3GA1BJ00018	Fuse holder	2	–
7	–	ACF01FB01	AC-outlet	3	–
8	–	MBS-1210-22	Noise filter	1	–
9	–	XYN4+J8FJ	Screw-pan	6	See P.38/39
10	–	XSS3+6FJ	Screw-flat	2	See P.38/39