12 Lamp unit (UD-S*7900042)

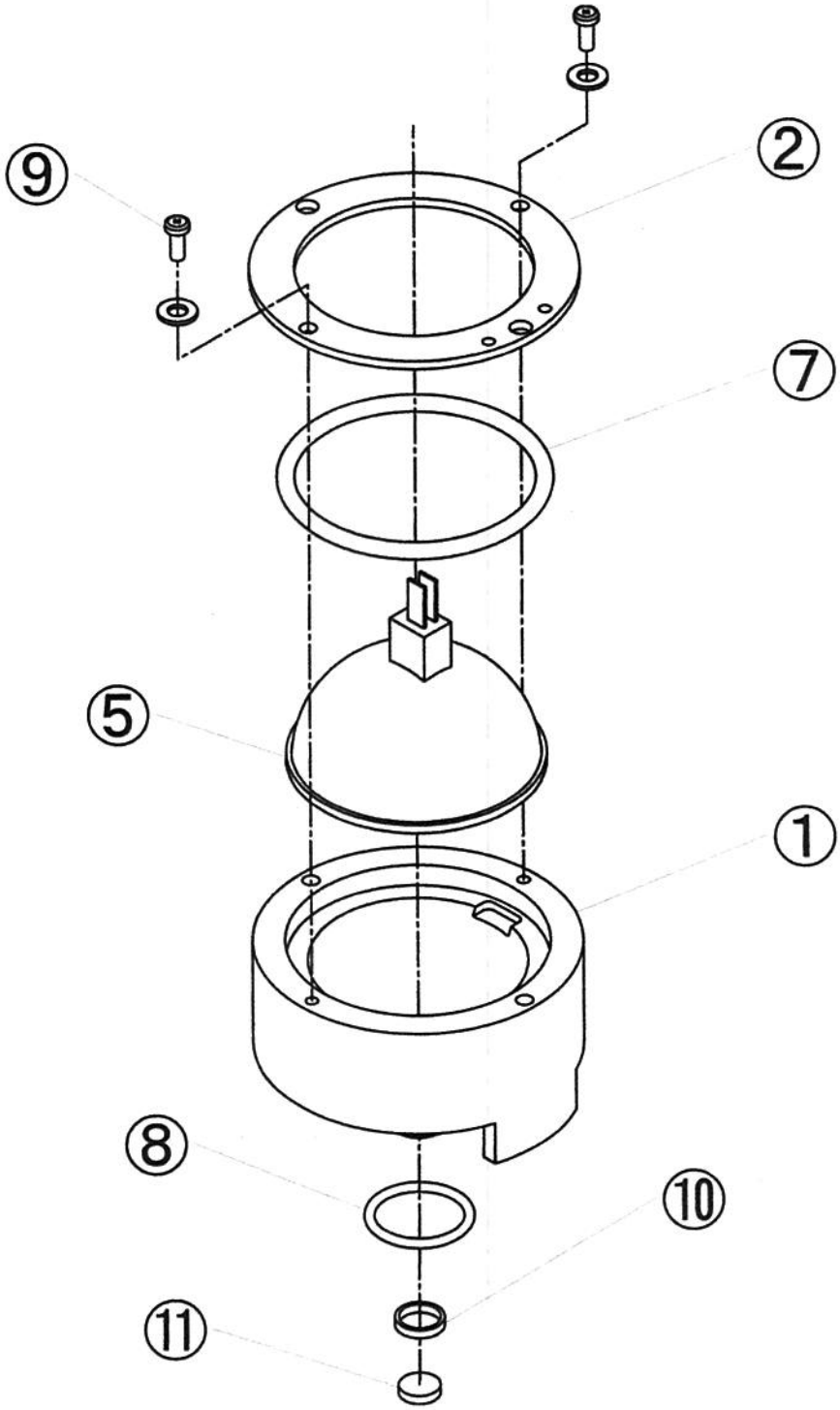

## 12 Lamp unit (UD-S*7900042)

Order min.Q'ty 1

| Ckt.No. | Order No. | Parts No | Part Name | Q'ty/Unit | order min.Q'ty |
|---|---|---|---|---|---|
| 1 | UD-S*7900046 | 710A0041-1 | Convergence tube without heat senser | 1 | 1 |
| 2 | - | 702A0053 | Plate | 1 | - |
| 3 | | | | | |
| 4 | | | | | |
| 5 | UD-S*7900044 | 700-13338G-K | Heating Lamp | 1 | See P.41 |
| 6 | | | | | |
| 7 | UD-S*7900047 | B2401-1AP46 | O-ring set | 1 | See P.40 |
| 8 | | B2401-1AP20 | | 1 | |
| 9 | - | XYN3+C8FJ | Screw-pan | 2 | See P.38/39 |
| 10 | UD-S*7900006 | 710A0088-1 | Silicone Rubber for Convergence Tube | 1 | See P.42 |
| 11 | UD-S*7900045 | 710A0087 | Silicone Filter | 1 | 1 |